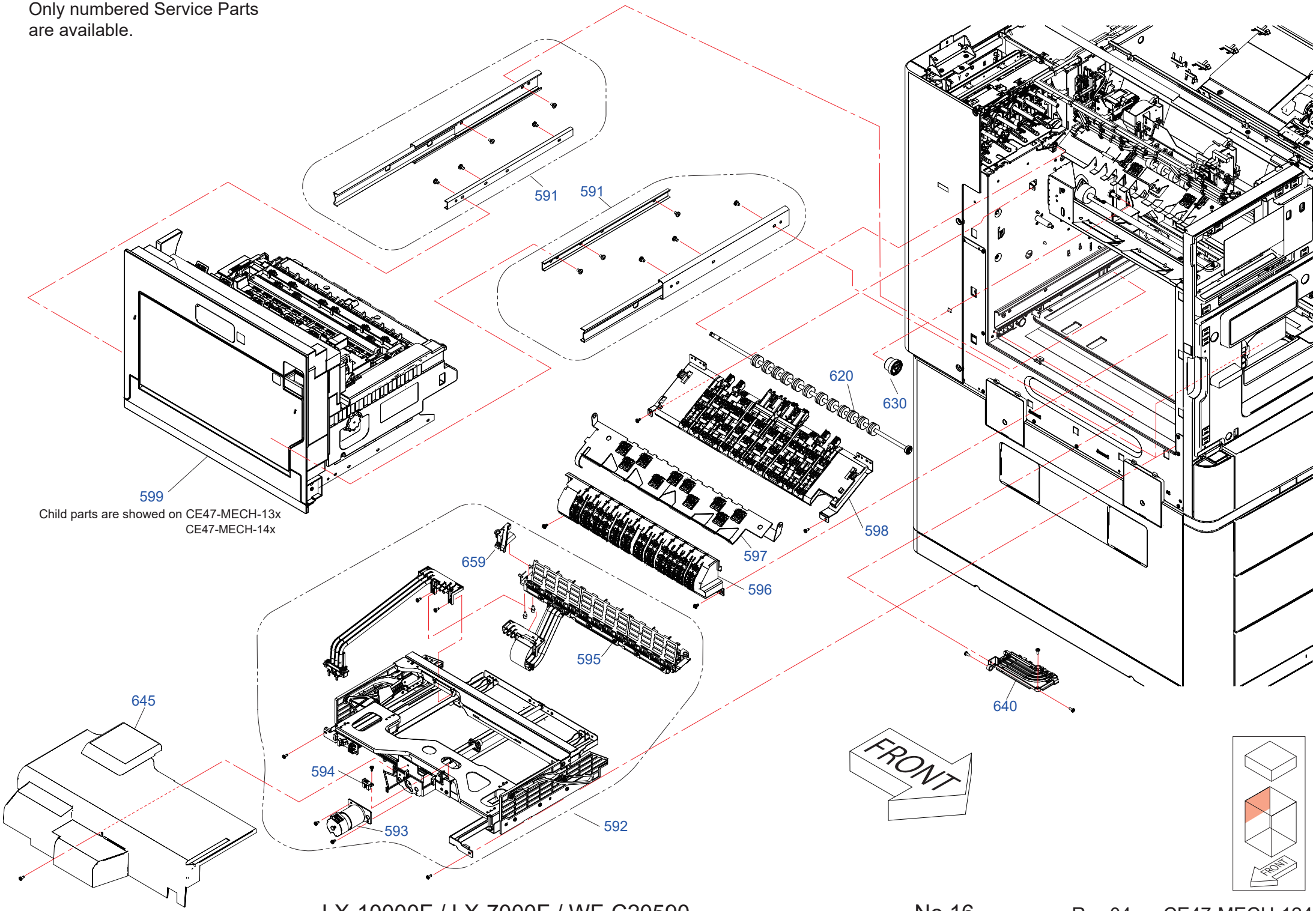Only numbered Service Parts
are available.